TWSS-1648-SS WALL SHELF

WALL MOUNT SHELF

Characteristics

- All stainless steel
- Wide selection of sizes
- Strong mounting brackets
- Space-saving wall mount design

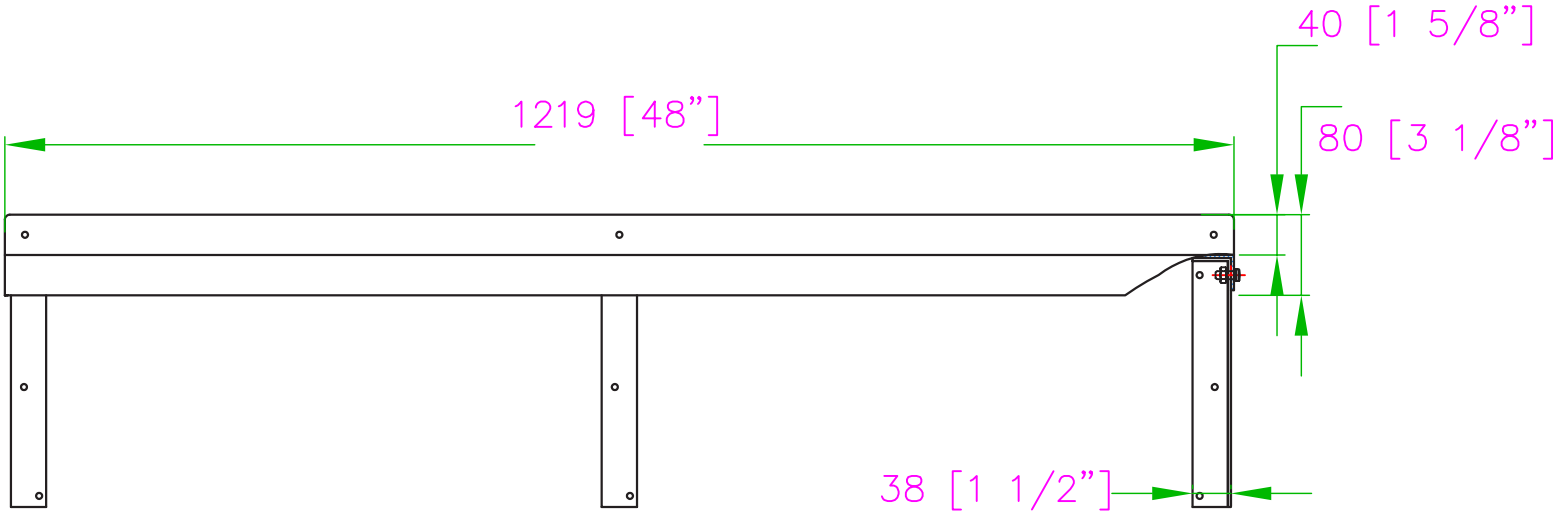

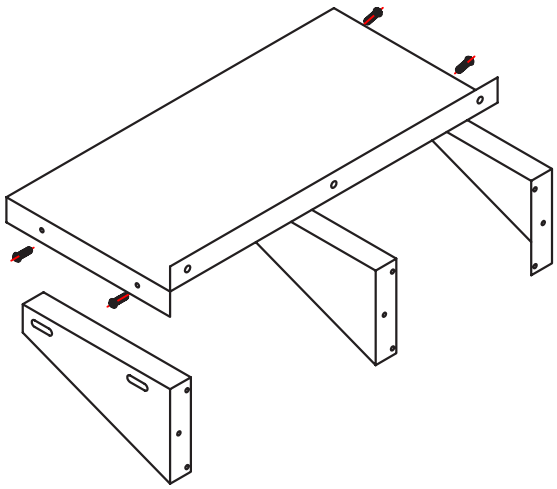

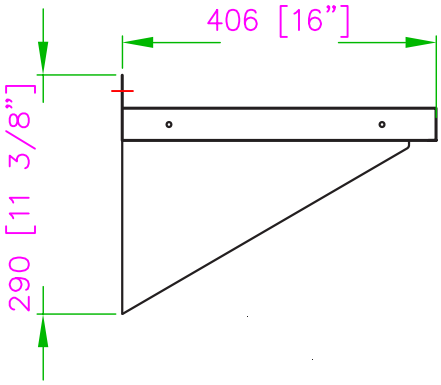

Distributed by:

DISTEX

www.distex.ca

Your Premium Partner