DSST-2472-BK WORKTABLE

Characteristics

- Made with high quality 430 stainless steel
- Easy to assemble
- 34” Height
- Gauge 18
- Economic shipping weight

Options

- Extra stainless steel undershelf
- Adjustable stainless steel leg insert
- Set of swivel casters
- Brace bar kit

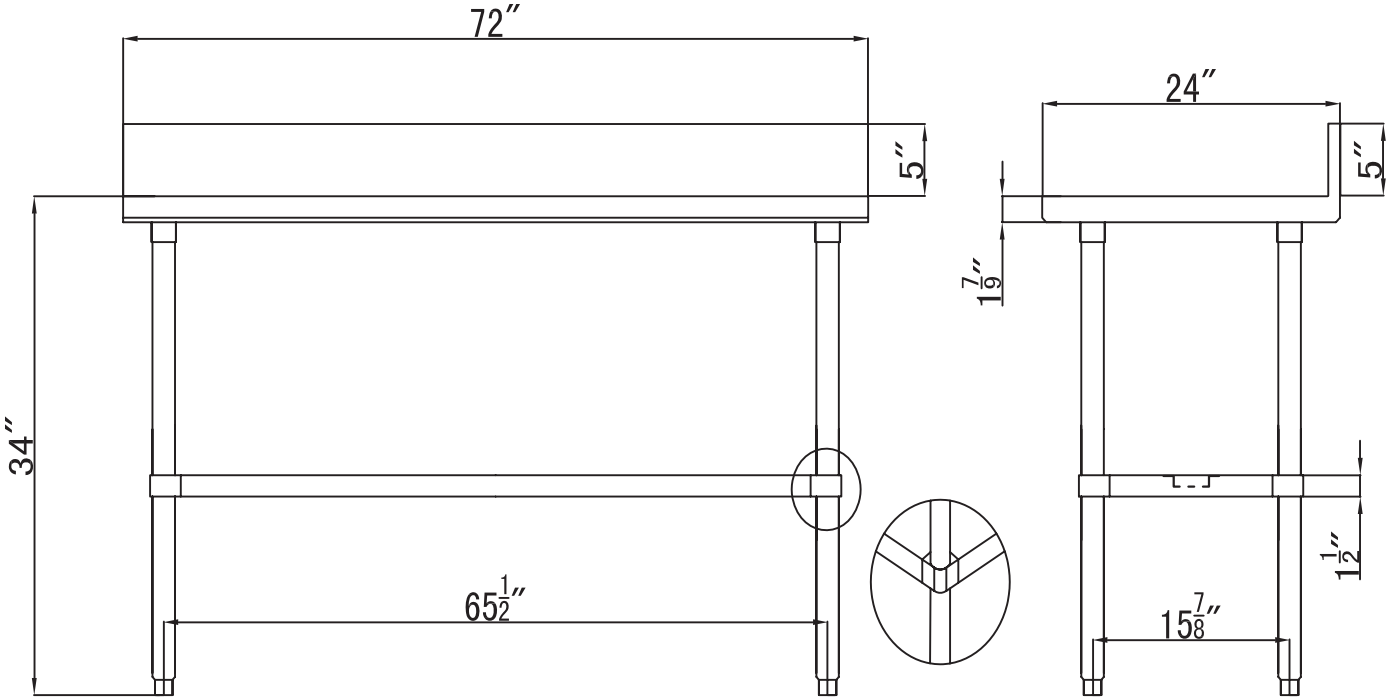

Distributed by:
DISTEX
www.distex.ca
Your Premium Partner